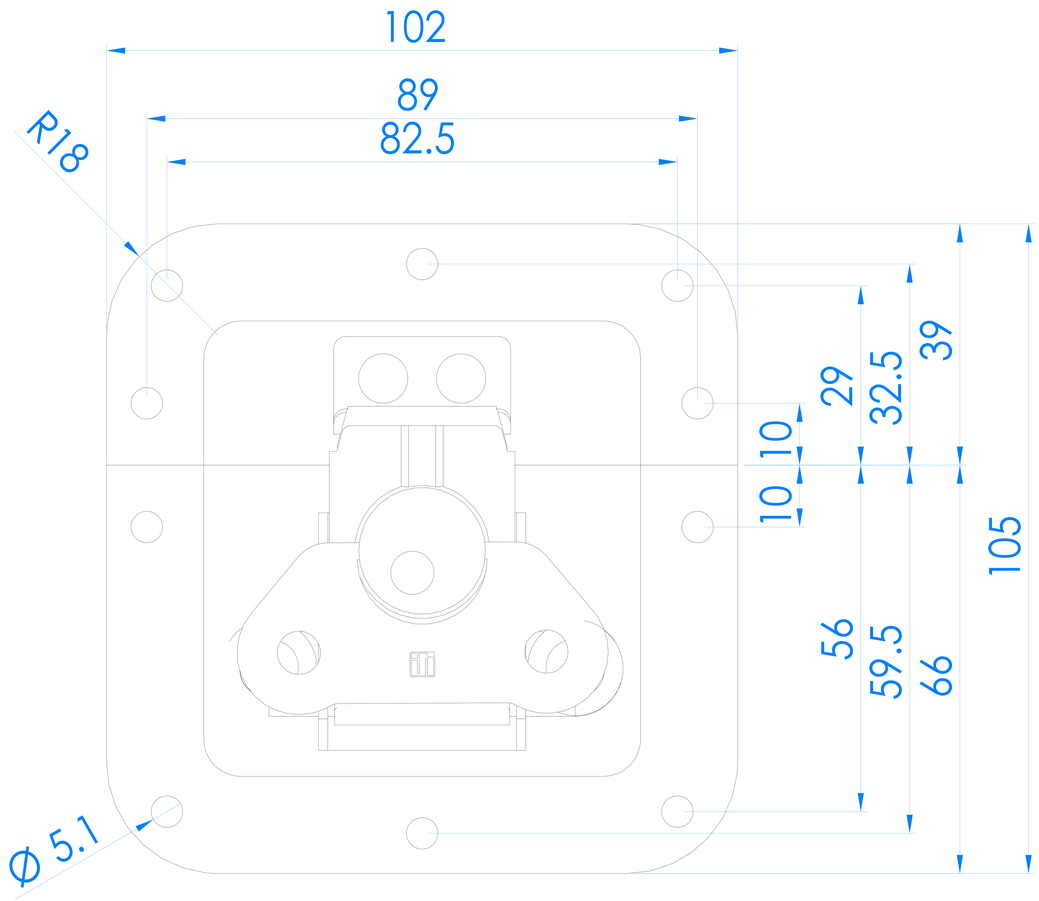

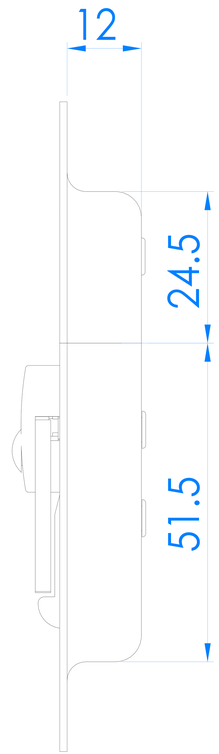

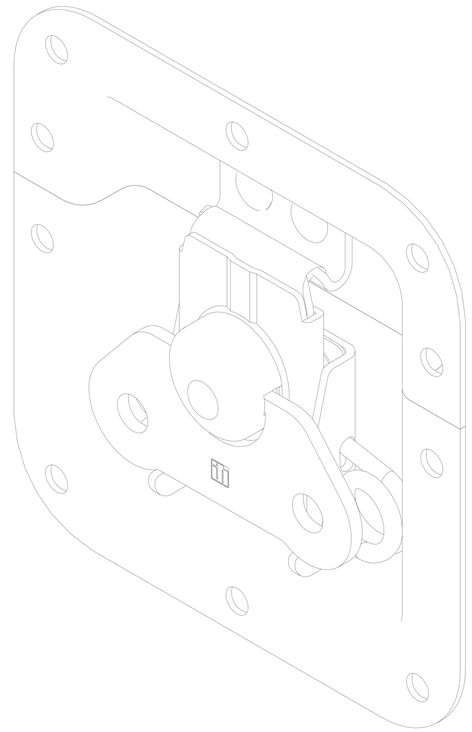

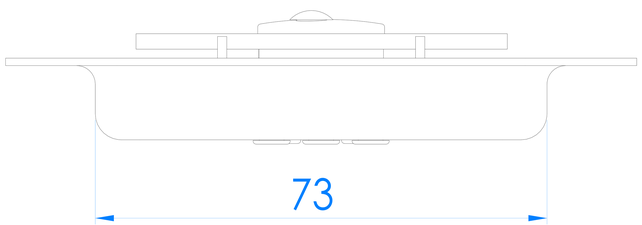

REVISION	3 2 1				. . . . . .
TOLERANCE CNS				NOMENCLATURE	17291S
APPROVED		DESIGN \	\		
CHECK		DRAWN \	\	NOM.OF FIGURE	\
FINISH	\	TREATMENT			
SCALE \	QUANTITY \	MATERIAL	\	NO. OF FIGURE	\
	UNIT mm	SIZE OF MATL		NO. OF WORK	SHEET

ADAM HALL GMBH